TECHNICAL DATA SHEET

www.RackSolutions.com

Server Cabinets

Model 151

FEATURES & BENEFITS

18U – 42U of rackable space
- Mounting depth: 6" – 30"
- Mounting depth: (152 - 762 mm)
- Overall depth: 39" (990 mm)
- Universal square holes
- Cage nuts included
- Compatible with leading OEMs
- $99 shipping to continental US

Secure rack made for servers
- 76% perforation on doors
- Exceeds air flow requirements
- 1680 lb (762 kg) capacity
- Lock upgrade options available
- Casters, leveling feet included

Doors & Sides
- Lockable, removable, reversible

APPLICATIONS
- Meets EIA 19" standards
- Moderate level of security
- Typical cabling installations

ACCESSORIES
- Universal rails (up to 200 lbs)
- Fixed shelves (up to 900 lbs)
- Sliding shelves (up to 235 lbs)
- KVM products
- Monitor mounts
- Power strips: 15A & 20A
- Drawers & boxes: 2U, 3U, 4U

The RackSolutions Server Cabinets provide a versatile rack mounting solution. With a number of height options, this cabinet is compatible with all leading OEM equipment and meets EIA-310-D standards for 19" rack mount equipment. This economical Server Cabinet is ideally suited for the most common types of server deployments. It provides adequate security and access control to satisfy most requirements. If additional security is needed, optional latches can be added that include master keys and multiple key combinations.

See additional pages for more product specifications and order information.

RackSolutions is a registered trademark of Rack Solutions, Inc. © Copyright 2011. All Rights Reserved. All other marks are the property of their respective owners. Patent(s) pending.

Toll Free: (888) 903-7225 | Fax: (903) 453-0808 | Email: info@racksolutions.com

TECHNICAL DATA SHEET

Server Cabinets

Model 151

TECHNICAL SPECIFICATIONS

18U, 22U, 27U, 32U, 37U, 42U

Rack Mounting Depth
- Standard depth: 29.1" (740 mm)
- Range: 6" – 30" (152 -762 mm)
- Internal space: 37.75" (959 mm)
- Front space: 2.875" (73 mm)*
- Rear space: 6.375" (162 mm)*

*Measured with installation depth of 29.1" (740 mm)

Weight Capacity
- 1680 lb (762 kg) capacity*

**Rated on leveling feet, not on casters*

Rack Outside Dimensions
- 39"D x 23.5"W (990 x 597 mm)

Heights
- 18U = 36.55" (928 mm)
- 22U = 43.55" (1106 mm)
- 27U = 52.30" (1328 mm)
- 32U = 61.05" (1550 mm)
- 37U = 69.80" (1773 mm)
- 42U = 78.55" (1995 mm)

Included Hardware
(40) 12-24 cage nuts
(40) 12-24 x 3/8" screws
(2) door keys
(2) side panel keys

Hole Type
- EIA-310-D 3/8" square holes

Rack Post Shape
- L Shape

Rack Ventilation
- 76% perforation on doors

Rack Doors & Sides
- Removable, lockable, reversible

Rack Casters
- Standard casters & leveling feet

Note: Casters are only to be used for positioning an empty rack, not for supporting a fully loaded rack.

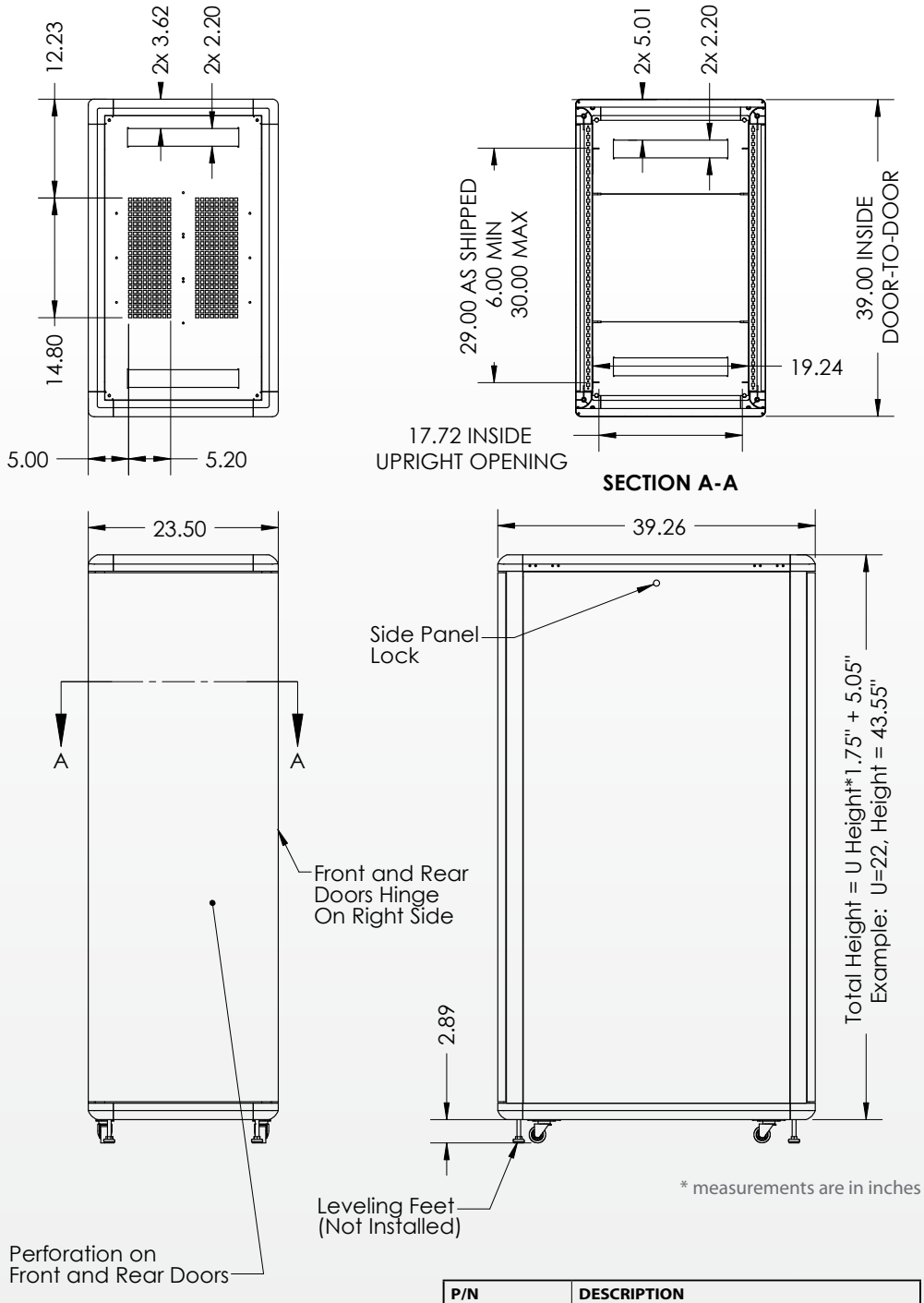

* measurements are in inches

P/N	DESCRIPTION
RACK-151-18U	18U Server Cabinet
RACK-151-22U	22U Server Cabinet
RACK-151-27U	27U Server Cabinet
RACK-151-32U	32U Server Cabinet
RACK-151-37U	37U Server Cabinet
RACK-151-42U	42U Server Cabinet

Reseller Agreements - Volume Agreements - Cage Code: 60QH5 - DUNS: 961816423 - POs accepted
RackSolutions is a registered trademark of Rack Solutions, Inc. © Copyright 2011. All Rights Reserved. All other marks are the property of their respective owners. Patent(s) pending.

Toll Free: (888) 903-7225 | Fax: (903) 453-0808 | Email: info@racksolutions.com

TECHNICAL DATA SHEET

www.RackSolutions.com

Server Cabinets

Model 151

FAN TRAY OPTIONS

Fans: 6 Axial AC fans
Power: 100-125 VAC 50/60 Hz
Fan Power: 0.20A per fan
Noise: 36/40 dBA
Fan Dimensions:
(120 x 120 x 38 mm)
4.72" x 4.72" x 1.5"
Speed: 2000/2400 rpm
Air Flow:
61/75 CFM per fan
(366/450 CFM Total)

Baying Kit

For added stability, multiple Server Cabinets may be coupled together with a Baying Kit

Latch Upgrade

The standard latch on the Server Cabinet is the same for every rack. When purchasing multiple Cabinets that require latches to be different for each, add a Latch Upgrade for each unit.

The Latch Upgrade offers a much higher degree of security than that of the standard latch. The Latch Upgrade includes a high quality, 5 tumbler lock, made in Germany. Latches with master keys are also available on request.

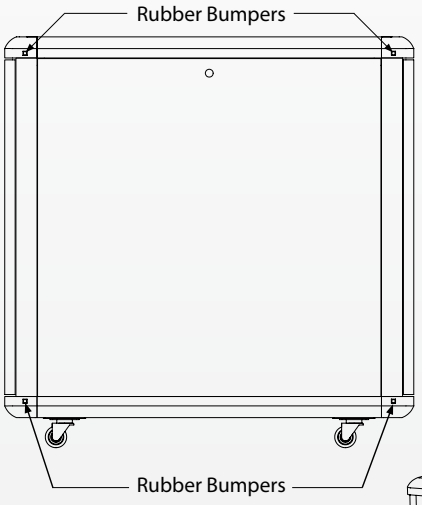

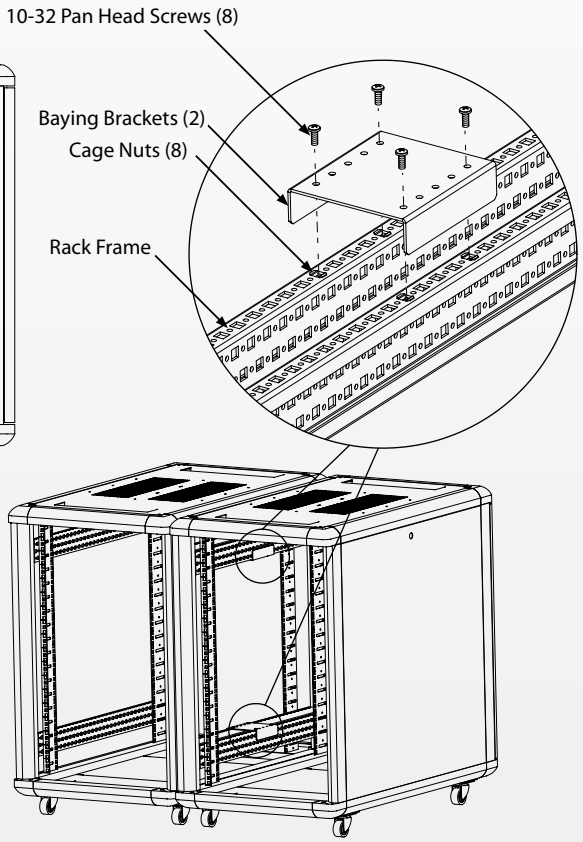

P/N	DESCRIPTION
RACK-151-Fantray-6	Fantray with 6 Fans for RACK-151
RACK-151-BAY	Rack-151 Baying Kit
RACK-151-LATCH	Rack-151 Latch Upgrade

RackSolutions is a registered trademark of Rack Solutions, Inc. © Copyright 2011. All Rights Reserved. All other marks are the property of their respective owners. Patent(s) pending.

Toll Free: (888) 903-7225 | Fax: (903) 453-0808 | Email: info@racksolutions.com